LED AR111

20AR111/LED/927/F25 DIM 12V 6/1FB

With an elegant new design, Philips MasterClass LED AR111 creates a brilliant visual effect. With excellent rendering of 90+ CRI and R9>50, colors stay vibrant and natural, enhancing the appeal of everything on display.

Product data

General Information	
Base	G53 [G53]
EU RoHS compliant	Yes
Nominal Lifetime (Nom)	25000 h
Switching Cycle	50000X
Technical Type	20-100W

Light Technical	
Color Code	927 [CCT of 2700K]
Beam Angle (Nom)	25 °
Initial lumen (Nom)	1150 lm
Luminous Intensity (Nom)	4000 cd
Color Designation	Warm White (WW)
Correlated Color Temperature (Nom)	2700 K
Luminous Efficacy (rated) (Nom)	57.00 lm/W
Color Consistency	<4
Color Rendering Index (Nom)	91
LLMF At End Of Nominal Lifetime (Nom)	70 %

Operating and Electrical	
Input Frequency	- Hz
Power (Rated) (Nom)	20 W
Lamp Current (Nom)	2400 mA
Wattage Equivalent	100 W
Starting Time (Nom)	0.5 s
Warm Up Time to 60% Light (Nom)	0.5 s
Power Factor (Nom)	0.7
Voltage (Nom)	ac electronic 12 V

Temperature	
T-Case Maximum (Nom)	80 °C

Controls and Dimming	
Dimmable	Yes

Approval and Application	
Energy Efficiency Label (EEL)	A
Suitable For Accent Lighting	Yes
Energy Consumption kWh/1000 h	- kWh

Product Data	
Order product name	20AR111/LED/927/F25 DIM 12V 6/1FB
EAN/UPC - Product	046677552381
Order code	552380
Numerator - Quantity Per Pack	1
Numerator - Packs per outer box	6
Material Nr. (12NC)	929002239804
Net Weight (Piece)	0.160 kg

LED AR111

Dimensional drawing

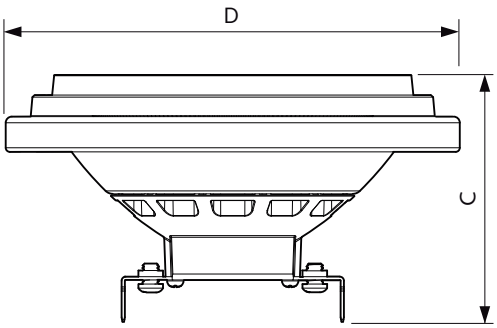

AR111 12V 20-100W 1100lm 25D 2700K G53 D

Product	D	C
20AR111/LED/927/F25 DIM 12V 6/1FB	111 mm	62 mm

Photometric data

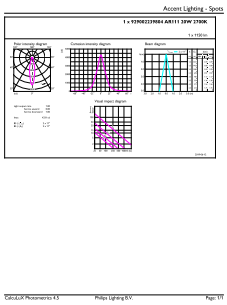

LEDspots 20W AR111 G53 927 24D

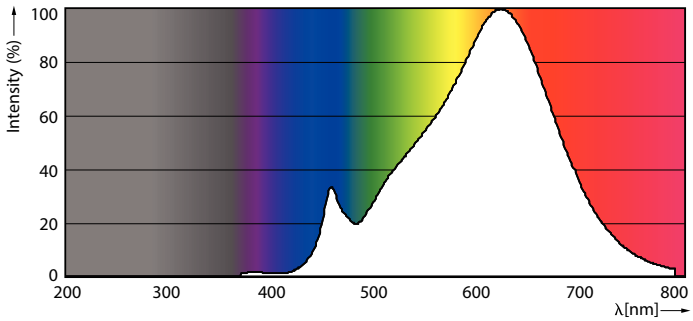

LEDspots 20W AR111 G53 927

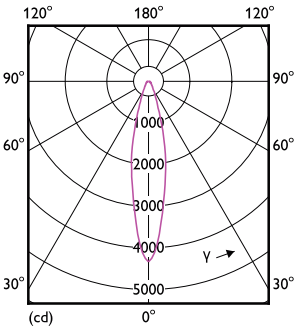

LEDspots 20W AR111 G53 927 24D

LED AR111

Lifetime

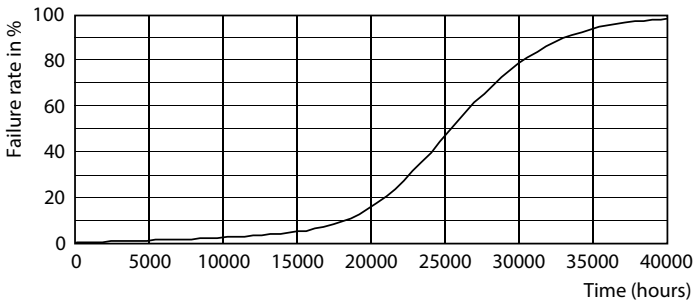

LEDspots LED 25K

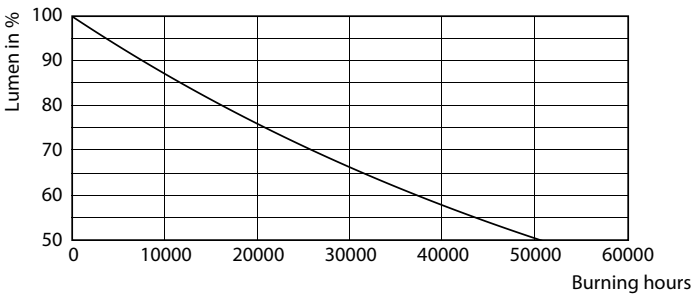

LEDspots LMP 25K

© 2020 Signify Holding All rights reserved. Signify does not give any representation or warranty as to the accuracy or completeness of the information included herein and shall not be liable for any action in reliance thereon. The information presented in this document is not intended as any commercial offer and does not form part of any quotation or contract, unless otherwise agreed by Signify. Philips and the Philips Shield Emblem are registered trademarks of Koninklijke Philips N.V.