LED MR16

8MR16/LED/830/F25/DIM 12V 10/1FB

Philips LED MR-16 lamps with single optic technology provide the look and color quality of traditional halogens while using a fraction of the energy. A perfect fit for spot lighting, they are compatible with most existing fixtures with MR16 GU5.3 holders and are designed as a retrofit replacement for halogen or incandescent spots.

Product data

General information	
Base	GU5.3 [GU5.3]
EU RoHS compliant	Yes
Nominal Lifetime (Nom)	25000 h
Switching Cycle	50000

Light technical	
Color Code	830 [CCT of 3000K]
Beam Angle (Nom)	25 °
Initial lumen (Nom)	620 lm
Luminous Intensity (Nom)	3250 cd
Color Designation	White (WH)
Correlated Color Temperature (Nom)	3000 K
Luminous Efficacy (rated) (Nom)	77.00 lm/W
Color Consistency	<4
Color Rendering Index (Nom)	80
LLMF At End Of Nominal Lifetime (Nom)	70 %

Operating and electrical	
Input Frequency	- Hz
Power (Rated) (Nom)	8 W
Lamp Current (Nom)	720 mA
Wattage Equivalent	75 W
Starting Time (Nom)	0.5 s
Warm Up Time to 60% Light (Nom)	0.5 s
Power Factor (Nom)	0.7
Voltage (Nom)	ac electronic 12 V

Temperature	
T-Case Maximum (Nom)	199.4 °F

Controls and dimming	
Dimmable	Only with specific dimmers

Mechanical and housing	
Bulb Finish	Clear
Bulb Material	Aluminum
Bulb Shape	MR16 [2inch/50mm]

Approval and application	
Suitable For Accent Lighting	Yes
Energy Certifications	Energy Star

LED MR16

Product data	
Order product name	8MR16/LED/830/F25/DIM 12V 10/1FB
EAN/UPC - Product	046677573911
Order code	573915
Numerator - Quantity Per Pack	1

Numerator - Packs per outer box	10
Material Nr. (12NC)	929003072604
Net Weight (Piece)	0.132 lb

Dimensional drawing

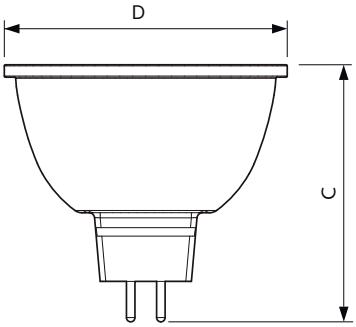

Product	D	C
8MR16/LED/830/F25/DIM 12V 10/1FB	2 in	1-7/8 in

8MR16/LED/830/F25/DIM 12V 10/1FB

Photometric data

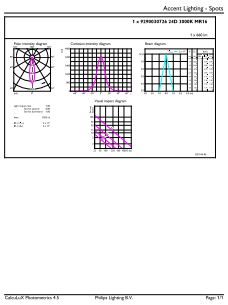

LEDspots DIM IC 8W MR16 GU5,3 830 25D-ADL

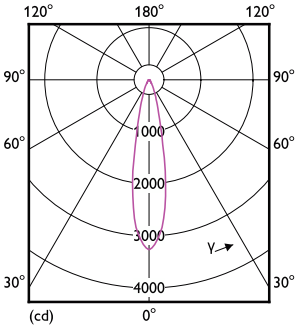

LEDspots DIM IC 8W MR16 GU5,3 827 25D-LDD

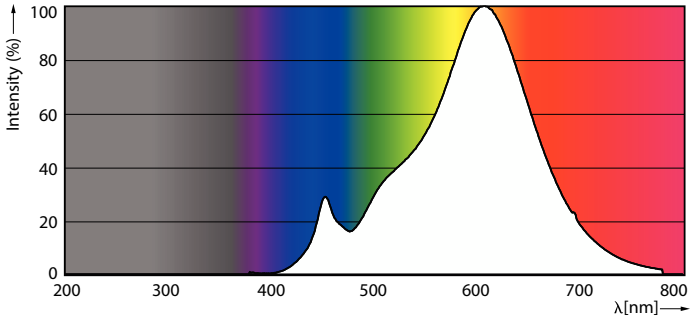

LEDspots DIM IC 8W MR16 GU5,3 830 25D-POC

Lifetime

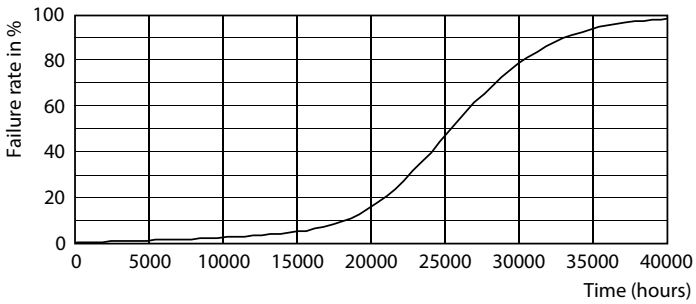

Life Expectancy Diagram

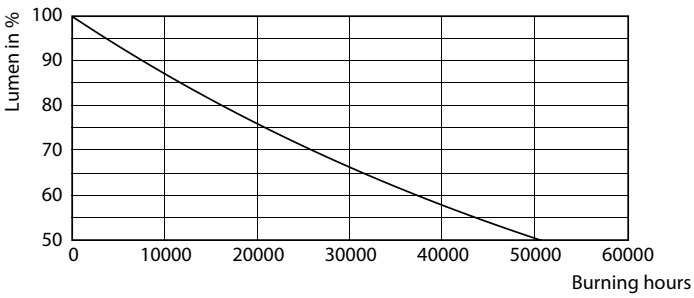

Lumen Maintenance Diagram

© 2022 Signify Holding All rights reserved. Signify does not give any representation or warranty as to the accuracy or completeness of the information included herein and shall not be liable for any action in reliance thereon. The information presented in this document is not intended as any commercial offer and does not form part of any quotation or contract, unless otherwise agreed by Signify. Philips and the Philips Shield Emblem are registered trademarks of Koninklijke Philips N.V.